Heating tools

It's a fact.

Incorrect mounting methods account for up to 16% of premature bearing failures

Main causes of premature bearing failures

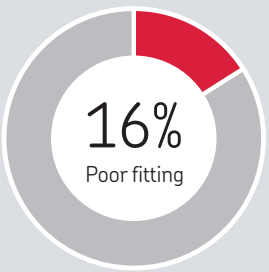

To reduce the risk of incorrect mounting, SKF helped pioneer the use of portable induction heaters for bearing mounting applications in the 1970's. Since that time, there have been many advances in technology and SKF has been at the forefront in developing safer, more efficient and user-friendly bearing induction heaters.

SKF Induction Heaters utilise advanced power electronics with application specific designs for high performance.

As a result, by using an SKF induction heater, the total cost of ownership is often significantly lower. Ergonomics and safety are also an important consideration for operators. SKF induction heaters are equipped with design features that make them easy to use and safe. Bearing support arms reduce the risk of the bearing toppling during heating, and ergonomically designed yokes help reduce operator fatigue. In addition, the unique remote control enables the operator to control the heater at a safe distance from the hot bearing, enhancing operator safety.

Induction heating has many advantages over other bearing heating methods

The use of an open flame to heat a bearing is not only inefficient and uncontrolled, but often leads to bearing damage. This method should not be used.

Oil baths are sometimes used to heat bearings. Oil baths often take a long time to reach the required temperature and can be difficult to control the actual bearing temperature. The energy consumption of an oil bath is also significantly greater than using an induction heater. The risk of contaminating the bearing due to dirty oil is significant and can lead to premature bearing failure. Handling hot, oily and slippery bearings present significant hazards to the operator and great care must be taken to avoid potential injuries.

Ovens and hot plates are often used for batch heating of small bearings and this is an acceptable technique. However, for larger bearings, the use of ovens and hotplates is generally quite inefficient and time consuming and can present the operator with significant handling hazards.

Induction heaters are the modern, efficient and safe way to heat bearings. In operation, they are generally faster, cleaner, more controllable, and easier to use than other heating methods.

Open flame

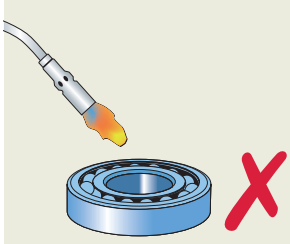

Oil baths

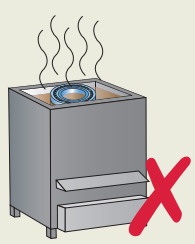

Ovens

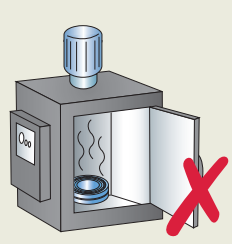

SKF induction heaters

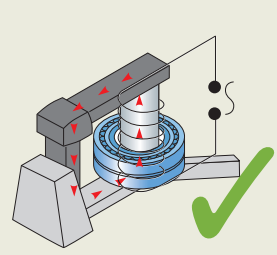

Thermostat controlled bearing heating

SKF Electric Hot Plate 729659 C

The SKF 729659 C is a heating device especially designed for pre-heating batches of small bearings prior to mounting. The temperature of the plate can be adjusted to provide temperatures between 50 and 200 °C *(120 and 390 °F)*. The flat heating surface ensures even bearing heating and the cover helps retain heat and keep contaminants out.

Technical data

Designation	729659 C 729659 C/110V		
Voltage	729659 C 230 V (50/60 Hz) 729659 C/110 V 115 V (50/60 Hz)	Height of cover	50 mm *(2 in.)*
Power	1 000 W	Overall dimensions (l × w × h)	390 × 240 × 140 mm *(15.4 × 9.5 × 5.5 in.)*
Temperature range	50–200 °C *(120–390 °F)*		
Plate dimensions (l × w)	380 × 178 mm *(15 × 7 in.)*	Weight	4,7 kg *(10 lb)*

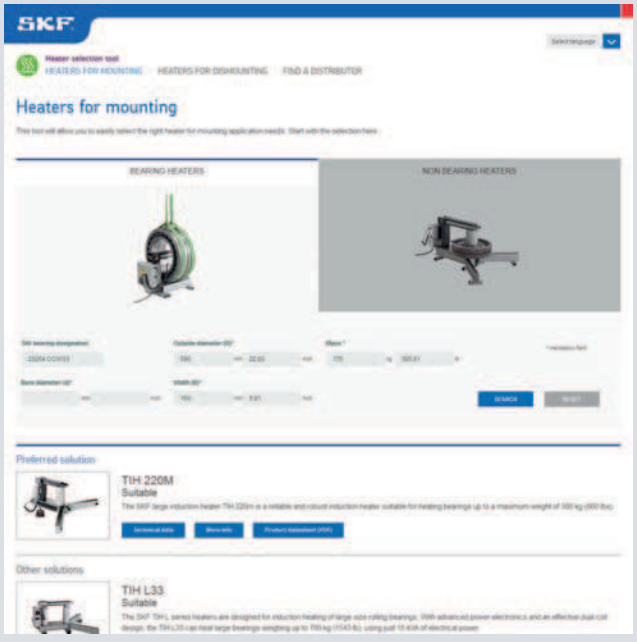

www.mapro.skf.com/heaterselect

Heater selection tool

The online heater selection tool helps to select the most appropriate SKF heater for a given hot mounting or dismounting application of bearings or annular workpieces.

In just three easy steps, you can define your heating application and receive a list of all suitable heaters for that application, including a recommendation of the heater that offers the best price-performance ratio.

The online heater selection tool is available free of charge, just scan the QR code or visit us on www.mapro.skf.com/heaterselect

The heater selection tool supports all mounting and fixed size EAZ dismounting heaters and offers additional information such as the product data sheet, technical data and product websites for each heater. If you cannot find the right heater for your application or you need more information, please don't hesitate to contact SKF.

The online heater selection tool is available in 8 languages: English, French, German, Spanish, Italian, Portuguese, Russian and Chinese.

Heating tools

A portable solution for bearing heating

Portable induction heater TWIM 15

The SKF portable induction heater TWIM 15 is designed to heat up roller bearings that are mounted with an interference fit onto a shaft. Heating the bearing causes it to expand, which eliminates the need to use force during installation. Generally, using the TWIM 15 to generate a 90 °C *(162 °F)* temperature difference between the bearing and shaft is sufficient to enable installation. In addition, the TWIM 15 can be used to heat other ring-shaped, metallic components, providing flexibility of use.

Utilizing electrical power, the TWIM 15 features glass-fiber, high-temperature-resistant plastic construction that allows a low temperature difference between the inner and outer rings of the bearing. This helps to reduce internal tensions that are generated due to excessive thermal expansion of the inner ring compared to the outer ring.

The unit has a user-friendly LED control panel that requires no special training and is simple to understand. The panel is used to regulate temperature and also indicates that the TWIM 15 is operational.

TWIM 15 advantages:

- Innovative heating of bearings
- Portable, compact and lightweight
- No support yokes required
- Automatic temperature monitoring
- Detects bearing size and heats appropriately
- Two power levels and three power configurations
- User-friendly LED control panel
- Quiet operation

The TWIM 15 portable induction heater package includes:

- Portable induction heater TWIM 15
- Magnetic K-type 400 mm temperature probe TWIM 15-3
- Temperature-resistant gloves TMBA G11
- Instructions for use

Versatile

Because of the induction plate's flat shape, a support yoke is not needed. This increases the type of components that can be heated on the plate and also reduces the number of required accessories.

Portable

Due to the medium-frequency technology used and choice of materials, the heater is lightweight. Also, the built-in handle makes it convenient to transport, and it can be stored easily.

Innovative heating

Utilizing smart construction and operating software, the heater produces a low temperature difference between the inner and outer ring of the bearing. This reduces the internal tensions generated due to excessive thermal expansion of the inner ring compared to the outer ring.

Power regulation

Featuring two power settings, the TWIM 15 can heat sensitive components at a slower pace. Also, a non-bearing power configuration is possible where most of the power is focused on the bore of the component.

Quiet

Using medium-frequency technology to heat components does not generate noise. An LED indicates when the TWIM 15 is heating, even if you cannot hear it!

Technical data

Designation	TWIM 15
Max. bearing weight [1]	20 kg *(44 lb)*
Min. bearing bore diameter	20 mm *(0.79 in.)*
Max. bearing outer diameter	320 mm *(12.6 in.)*
Max. bearing width	85 mm *(3.35 in.)*
Performance examples (bearing, weight, temperature, time)	6320: 7,1 kg *(15.7 lb)*, 110 °C *(230 °F)*, 5 min 20 s 22320 CC/W33: 12,8 kg *(28.2 lb)*, 110 °C *(230 °F)*, 12 min 35 s
Maximum power	TWIM 15/230 V: 2,3 kVA 1,8 kVA for the TWIM 15/110 V TWIM 15/110 V: 1,8 kVA
Voltage	TWIM 15/230 V: 230 V, 50 Hz TWIM 15/110 V: 110 V, 60 Hz
Max. current consumption	TWIM 15/230 V: 10 A TWIM 15/110 V: 16 A
Temperature control	20-200 °C *(68-392 °F)*
Demagnetisation according to SKF norms	Automatic
Dimensions (w x d x h)	450 x 500 x 100 mm *(17.7 x 19.7 x 3.9 in.)*
Total weight	6,6 kg *(14.6 lb)*

[1] Depending on the geometry of the bearing, maximum heating temperature and power availability.

Heating tools

TIH series

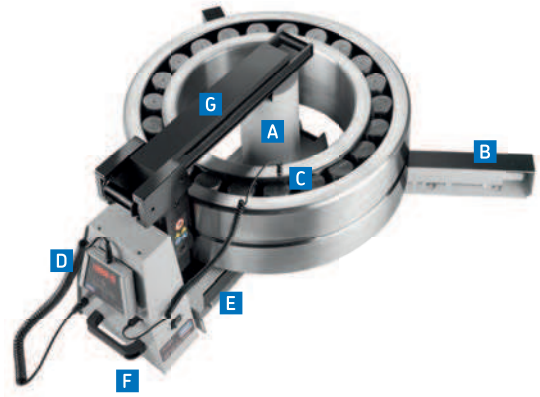

Features and benefits

The comprehensive SKF induction heater range can be used for efficiently heating bearings and workpieces, both large and small. Their innovative design offers significant advantages to both owners and operators:

- Advanced power electronics, with accurate electric current control, help control the temperature rate increase
- Two step power setting option (50% / 100%), enables small bearings to be heated safely and at a lower power consumption
- For heating components other than bearings, all heaters are equipped with a heating time mode and for large components, optimized TIH MB heaters for solid workpieces are available
- Thermal overheating protection reduces the risk of damage to the induction coil and electronics, enhancing reliability and safety
- Automatic demagnetisation reduces the risk of ferrous debris contamination after heating
- Available in different voltage variants, to suit most operating voltages worldwide
- Supplied with heat-resistant gloves for improved operator safety

A Induction coil located outside the heater's housing enables a shorter heating time and lower energy consumption
B Foldable bearing support arms allow larger diameter bearings to be heated, and reduce the risk of the bearing toppling during heating
C Magnetic temperature probe, combined with a temperature mode preset at 110 °C *(230 °F)*, helps prevent bearing overheating
D Unique SKF remote control, with operating display and control panel, makes the heater easy and safe to use
E Internal yoke storage, for smaller yoke(s), reduces the risk of yoke damage or loss
F Integrated carrying handles allow for easy movement of the heater in the workshop
G Sliding or swivel arm allows for easy and quick bearing replacement, reducing operator fatigue (not for TIH 030m)

SKF induction heater range

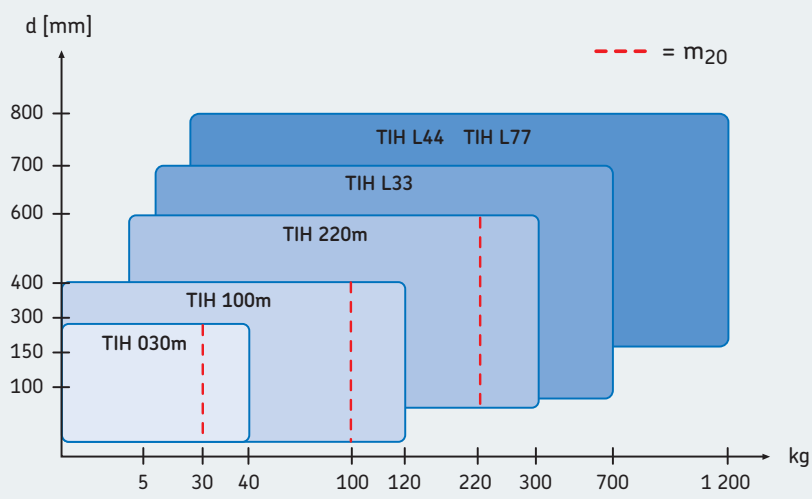

The comprehensive range of SKF induction heaters is suitable for most bearing heating applications. The chart gives general information on choosing an induction heater for bearing heating applications [1].

The SKF m_{20} concept represents the weight (kg) of the heaviest SKF spherical roller bearing of series 231 which can be heated from 20 to 110 °C *(68 to 230 °F)* in 20 minutes. This defines the heater's power output instead of its power consumption. Unlike other bearing heaters, there is a clear indication of how long it takes to heat a bearing, rather than just the maximum bearing weight possible.

[1] For heating components other than bearings, SKF recommends consideration of TIH L MB series heater. Contact SKF to help you select a suitable induction heater for your application.

Small induction heater with a 40 kg bearing heating capacity

TIH 030m

- Compact lightweight design; just 21 kg *(46 lb)*, facilitating portability
- Capable of heating a 28 kg *(62 lb)* bearing in just 20 minutes
- Supplied standard with three yokes, allowing bearings with a bore diameter from 20 mm *(0.8 in.)* up to a maximum weight of 40 kg *(90 lb)* to be heated

Medium induction heater with a 120 kg bearing heating capacity

TIH 100m

- Capable of heating a 97 kg *(213 lb)* bearing in less than 20 minutes
- Supplied standard with three yokes, allowing bearings with a bore diameter from 20 mm *(0.8 in.)* up to a maximum weight of 120 kg *(264 lb)* to be heated
- Swivel arm for large size yoke

Large induction heater with a 300 kg bearing heating capacity

TIH 220m

- Capable of heating a 220 kg *(480 lb)* bearing in just 20 minutes
- Supplied standard with two yokes, allowing bearings with a bore diameter from 60 mm *(2.3 in.)* up to a maximum weight of 300 kg *(660 lb)* to be heated
- Sliding arm for large size yoke

Technical data

Designation	TIH 030m	TIH 100m	TIH 220m
Max. bearing weight	40 kg *(88 lb)*	120 kg *(264 lb)*	300 kg *(662 lb)*
Bore diameter range	20–300 mm *(0.8–11.8 in.)*	20–400 mm *(0.8–15.7 in.)*	60–600 mm *(2.3–23.6 in.)*
Operating area (w × h)	100 × 135 mm *(3.9 × 5.3 in.)*	155 × 205 mm *(6.1 × 8 in.)*	250 × 255 mm *(9.8 × 10 in.)*
Coil diameter	95 mm *(3.7 in.)*	110 mm *(4.3 in.)*	140 mm *(5.5 in.)*
Standard yokes (included) to suit bearing/workpiece minimum bore diameter	65 mm *(2,6 in.)* 40 mm *(1.6 in.)* 20 mm *(0.8 in.)*	80 mm *(3.1 in.)* 40 mm *(1.6 in.)* 20 mm *(0.8 in.)*	100 mm *(3.9 in.)* 60 mm *(2.3 in.)*
Performance example (bearing, weight, temperature, time)	23136 CC/W33, 28 kg, 110 °C, 20m	23156 CC/W33, 97 kg, 110 °C, 20m	23172 CC/W33, 220 kg, 110 °C, 20m
Max. power consumption	2,0 kVA	3,6 kVA (230 V) 4,0–4,6 kVA (400–460 V)	10,0–11,5 kVA (400–460 V)
Voltage [1]			
100–120 V/50–60 Hz	TIH 030m/110 V	–	–
200–240 V/50–60 Hz	TIH 030m/230 V	TIH 100m/230 V	TIH 220m/LV
400–460 V/50–60 Hz	–	TIH 100m/MV	TIH 220m/MV
Temperature control [2]	20 to 250 °C *(68 to 482 °F)*	20 to 250 °C *(68 to 482 °F)*	20 to 250 °C *(68 to 482 °F)*
Demagnetisation according to SKF norms	<2 A/cm	<2 A/cm	<2 A/cm
Dimensions (w × d × h)	460 × 200 × 260 mm *(18.1 × 7.9 × 10.2 in.)*	570 × 230 × 350 mm *(22.4 × 9 × 13.7 in.)*	750 × 290 × 440 mm *(29.5 × 11.4 × 17.3 in.)*
Total weight (incl. yokes)	20,9 kg *(46 lb)*	42 kg *(92 lb)*	86 kg *(189 lb)*

[1] Some special voltage versions (e.g. 575V, 60 Hz CSA ready) are available for specific countries. For additional information, please contact your local SKF authorised distributor.
[2] Maximum heating temperature capacity depends on the weight and geometry of the bearing or workpiece. The heaters can achieve higher temperatures, please contact SKF for advice.

Heating tools

TIH L series

The SKF TIH L series heaters are characterized by a high heating power and large size. They are the continuation of the TIH series for heating large size bearings.
All heaters are equipped with sliding yokes, dual coil design and advanced power electronics. The frame of the heater allows easy transportation by fork lift. The key differences between heaters in the TIH L range are heating power and operating area.

Large induction heater with a 700 kg bearing heating capacity

TIH L33

- Using just 15 kVA of electrical power, the TIH L33 can heat large bearings up to 700 kg (1 543 lb)
- Two optional yokes available for smaller bearing diameters.
- Available in 230 and 400V executions.

Extra-large induction heater with a 1 200 kg bearing heating capacity

TIH L44

- Using 20 kVA of electrical power, the TIH L44 can heat large bearings up to 1 200 kg *(2 600 lb)*
- One optional yoke available for smaller bearing diameters.
- Available in 230 and 400V executions.

Extra-large induction heater with expanded operating area

TIH L77

- Extra-large induction heater with expanded operating area
- Using 20 kVA of electrical power, the TIH L77 can heat large bearings up to 1 200 kg *(2 600 lb)*
- Extra-large operating area for special bearing and component sizes

The sliding yoke is a robust mechanism to easily and safely move the yoke. The sliding rails are very durable and prevent the yoke from accidentally falling. The sliding yoke can easily be replaced by a smaller optional yoke.

The dual coil design offers high performance for heating bearings in either the horizontal or vertical orientation and gives you the flexibility to heat the bearing in the same orientation as the shaft for fast and convenient mounting. By utilizing two coils, the heaters allow more homogeneous heating and offer additional safety for the hot mounting of large sized bearings.

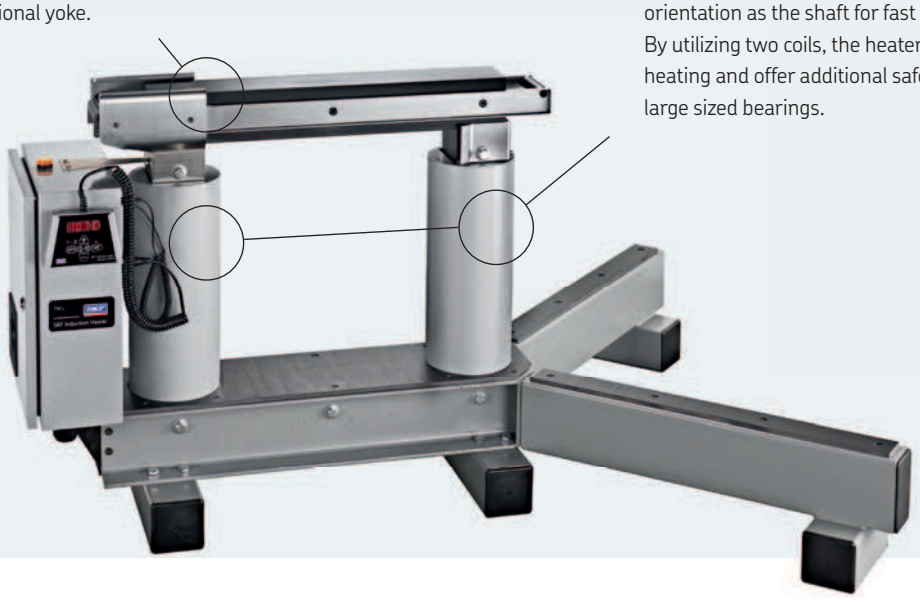

Technical data - TIH L series

Designation	TIH L33	TIH L44	TIH L77
Max. bearing weight	700 kg *(1 543 lb)*	1 200 kg *(2 600 lb)*	1 200 kg *(2 600 lb)*
Bore diameter range	115–700 mm *(4.5–27.6 in.)*	150–800 mm *(5.9–31.5 in.)*	150–800 mm *(5.9–31.5 in.)*
Operating area (w × h)	300 × 320 mm *(11.8 × 12.6 in.)*	425 × 492 mm *(16.7 × 19.4 in.)*	725 × 792 mm *(28.5 × 31.2 in.)*
Coil diameter	150 mm *(5.9 in.)*	175 mm *(6.9 in.)*	175 mm *(6.9 in.)*
Standard yokes (included) to suit bearing minimum bore diameter	115 mm *(4.5 in.)*	150 mm *(5.9 in.)*	150 mm *(5.9 in.)*
Optional yokes to suit bearing minimum bore diameter	80 mm *(3.1 in.)* 60 mm *(2.4 in.)*	100 mm *(3.9 in.)*	–
Performance example (bearing, weight, temperature, time)	24188ECA/W33, 455 kg, 110 °C, 28m	24188ECA/W33, 455 kg, 110 °C, 13m	–
Max. power consumption	TIH L33/LV: 15 kVA TIH L33/MV: 15 kVA	TIH L44/MV: 20–23 kVA TIH L44/LV: 20–24 kVA	TIH L77/MV: 20–23 kVA TIH L77/LV: 20–24 kVA
Voltage [1] 200–240 V/50–60 Hz 400–460 V/50–60 Hz	 TIH L33/LV TIH L33/MV	 TIH L44/LV TIH L44/MV	 TIH L77/LV TIH L77/MV
Temperature control [2]	0 to 250 °C *(32 to 482 °F)*	20 to 250 °C *(68 to 482 °F)*	20 to 250 °C *(68 to 482 °F)*
Demagnetisation according to SKF norms	<2 A/cm	<2 A/cm	<2 A/cm
Dimensions (w × d × h)	400 × 743 × 550 mm *(15.8 × 29.3 × 21.7 in.)*	1 200 × 600 × 850 mm *(47.3 × 23.6 × 33.5 in.)*	1 320 × 600 × 1 150 mm *(52 × 23.6 × 45.3 in.)*
Total weight (incl. yokes)	140 kg *(309 lb)*	324 kg *(714 lb)*	415 kg *(915 lb)*

[1] Some special voltage versions (e.g. 575V, 60 Hz CSA ready) are available for specific countries. For additional information, please contact your local SKF authorised distributor.
[2] Maximum heating temperature capacity depends on the weight and geometry of the bearing or workpiece. The heaters can achieve higher temperatures, please contact SKF for advice.

The TIH L series of SKF Induction Heaters is designed for fast and safe mounting of large bearings in the workshop or in the field. The heaters offer great versatility and are suitable for a large variety of bearing types and sizes. TIH L series heaters can be found in almost all industries with large sized bearings.

Heating tools

Solid workpiece heaters

The SKF TIH L MB series is specially designed to heat solid workpieces, such as rings, sleeves, gears, couplings, bushings and pulleys, as well as train wheels, tires or similar components. Featuring one magnetic coil in the center, these powerful and durable heaters localize the heating in the workpiece bore for superior performance on solid components.

The TIH L MB heats non-bearing workpieces up to 600 kg *(1 323 lb)*, depending on the model.

The TIH L MB induction heater is equipped with a remote control panel for operator safety.

Advice: The SKF TIH L MB series heaters are designed for induction heating of solid, non-bearing components. For bearing-heating applications, we recommend the use of equivalent SKF TIH L series heaters.

Induction heaters for non-bearing applications

TIH L MB series

The TIH L MB series provides the following advantages for quick and effective heating of solid workpieces:

- Simple and safe operation with remote-control and power level selection
- Superior heating performance for solid workpieces with low energy consumption
- Quick and easy placement of solid components with sliding yoke
- Automatic demagnetization reduces risk of ferrous debris contamination
- Easy to transport using standard forklift
- Available in three voltage variants to suit most operating voltages worldwide
- Available with three different operating areas

Technical data

Designation	TIH L33MB	TIH L44MB	TIH L77MB
Maximum workpiece weight	350 kg *(772 lb)*	600 kg *(1 323 lb)*	600 kg *(1 323 lb)*
Bore diameter range	115–700 mm *(4.5–27.6 in.)*	150–800 mm *(5.9–31.5 in.)*	150–800 mm *(5.9–31.5 in.)*
Operating area (w × h)	330 × 320 mm *(13.0 × 12.6 in.)*	465 × 492mm *(18.3 × 19.4 in.)*	765 × 792mm *(30.1 × 31.2 in.)*
Coil diameter	150 mm *(5.9 in.)*	175 mm *(6.9 in.)*	175 mm *(6.9 in.)*
Standard yokes (included) to suit workpiece minimum bore diameter	115 mm *(4.5 in.)*	150 mm *(5.9 in.)*	150 mm *(5.9 in.)*
Max. power consumption	TIH L33MB/MV: 15 kVA TIH L33MB/LV: 15 kVA	TIH L44MB/LV: 20–24 kVA TIH L44MB/MV: 20–23 kVA	TIH L77MB/LV: 20–24 kVA TIH L77MB/MV: 20–23 kVA
Voltage [1] 200–240 V/50–60 Hz 400–460 V/50–60 Hz	 TIH L33MB/LV TIH L33MB/MV	 TIH L44MB/LV TIH L44MB/MV	 - TIH L77MB/MV
Temperature control	0–250 °C *(32–482 °F)*; in steps of 1°	0–250 °C *(32–482 °F)*; in steps of 1°	0–250 °C *(32–482 °F)*; in steps of 1°
Time control	0–120 minutes; in steps of 0,1 minute	0–120 minutes; in steps of 0,1 minute	0–120 minutes; in steps of 0,1 minute
Demagnetisation according to SKF norms	<2A/cm	<2A/cm	<2A/cm
Maximum heating temperature [2]	250 °C *(482 °F)*	250 °C *(482 °F)*	250 °C *(482 °F)*
Dimensions (w × d × h)	400 × 743 × 550 mm *(15.8 × 29.3 × 21.7 in.)*	1 200 × 600 × 850 mm *(47.3 × 23.6 × 33.5 in.)*	1 320 × 600 × 1 150 mm *(52 × 23.6 × 45.3 in.)*
Weight	140 kg *(309 lb)*	324 kg *(714 lb)*	415 kg *(915 lb)*

[1] Some special voltage versions (e.g. 575V, 60Hz CSA ready) are available for specific countries. For additional information, please contact your local SKF authorised distributor.
[2] Depending on bearing or workpiece weight. For higher temperatures, please contact SKF.

A unique and flexible heating solution for very large bearings and workpieces

Multi-core induction heaters, TIH MC series

The SKF multi-core induction heaters are energy efficient, custom-made heating solutions. Compared to other heating methods, they often can significantly save heating time. The TIH MC series are similar to the standard TIH range, with a few key differences and additional features:

- Flexible design, consisting of a number of induction heating cores and coils controlled by a single control and power cabinet
- Suitable for heating large thin section workpieces, such as slewing rings and railway wheel tyres
- Heating capacities of several tonnes are possible, depending on application
- Enables a more even temperature gradient across the whole circumference. This is especially important for components sensitive to uneven induction heating
- Unique design allows for custom-made solutions to be quickly and economically produced

SKF can configure the type of TIH MC series heater required, depending on the application. For additional information, contact your SKF authorised distributor

Heating tools

Dismounting

SKF's range of heating equipment enables quick and safe dismounting of cylindrical roller bearing inner rings and covers a wide range of applications. Aluminium heating rings TMBR series are designed for dismounting inner rings of small and medium-size cylindrical roller bearings. Adjustable and fixed induction heaters EAZ series are suitable for frequent dismounting of various sizes of cylindrical roller bearing inner rings.

For regular dismounting of cylindrical roller bearings

SKF Aluminium Heating Rings TMBR series

The aluminium heating rings are designed for dismounting inner rings of cylindrical roller bearings. After pre-heating the TMBR ring, it is clamped on the bearing inner ring to rapidly transfer the heat to the bearing ring and expand it for dismounting.

- Simple and easy-to-use
- Avoids shaft and bearing inner ring damage

Technical data

Designation	TMBR + bearing designation (e.g. TMBR NU216E)
Material	Aluminium
Maximum temperature	300 °C *(572 °F)*

SKF Aliminium Heating Rings TMBR series are produced to accurately fit a specific bearing ring. The lists with ordering details make it easy to find the right TMBR for a given bearing designation.

Orderings details - NJ

Bearing/ring designation	TMBR designation;
NJ 218 E ...	TMBR NJ218E
NJ 2318 E ...	TMBR NJ2318E

Orderings details - others

Bearing/ring designation	TMBR designation;
NUP 215	TMBR NUP215
313822	TMBR 313822
NJ 120x240 TN/VA820 NJP 120x240 TN/VA820	TMBR 120X240
NJ 130x240 TN_VA820 NJP 130x240 TN_VA820	TMBR NJ130X240

Dismounting procedure

A Clean the shaft, inner ring and aluminium ring. Make sure that there are no damages on the shaft that could prevent the bearing ring removal.

B Coat the raceway of the inner ring with an oil with following specications:
- heat resisting 280 °C *(536 °F)*
- heat transmitting
- rust preventing
- high viscosity

C Heat the aluminium ring to 280 °C *(536 °F)*. For correct temperature control SKF advises the use of a thermometer, e.g. SKF Thermometer TKDT 10 or SKF Infrared Thermometer TKTL 20 which are both supplied with the standard surface probe TMDT 2-30.

D Place the aluminium ring around the bearing inner ring and press the handles together (or clamp locking device). Wait for a short time, then try to rotate the tool with the ring until it comes loose from the shaft.

Orderings details - NU

Bearing/ring designation	TMBR designation;
NU 1011 and NU 1011 E...	TMBR NU1011EC
NU 1018 M	TMBR NU1018
NU 1034	TMBR NU1034
NU 1036 ML	TMBR NU1036
NU 206 E ...	TMBR NU206EC
NU 209 E ...	TMBR NU209E
NU 210 E ...	TMBR NU210EC
NU 212	TMBR NU212
NU 213	TMBR NU213
NU 213 E ...	TMBR NU213E
NU 214	TMBR NU214
NU 214 E ...	TMBR NU214EC
NU 215 and NU 215 E ...	TMBR NU215
NUP 215	TMBR NUP215
NU 216 and NU 216 E ...	TMBR NU216EC
NU 217	TMBR NU217
NU 217 E ...	TMBR NU217EC
NJ 218 and NJ 218 E ...	TMBR NJ218E
NU 218 and NU 218 E ...	TMBR NU218
NU 219 E ...	TMBR NU219E
NU 2212 E ...	TMBR NU2212EC
NU 2213 E ...	TMBR NU2213E
NU 2214 E ...	TMBR NU2214E
NU 222	TMBR NU222
NU 2224 and NU 2224 E...	TMBR NU2224E
NU 226 E ...	TMBR NU226EC
NU 236 E ...	TMBR NU236E
NU 238 E ...	TMBR NU238EC
NU 310	TMBR NU310
NU 311	TMBR NU311
NU 312	TMBR NU312
NU 312 E ...	TMBR NU312EC
NU 313	TMBR NU313
NU 313 E ...	TMBR NU313EC
NU 314	TMBR NU314
NU 315	TMBR NU315
NU 316	TMBR NU316
NU 316 E ...	TMBR NU316E
NU 317	TMBR NU317
NU 318 E ...	TMBR NU318E
NU 319	TMBR NU319
NU 320 E ...	TMBR NU320EC
NU 322 and NU 322 E ...	TMBR NU322
NU 324	TMBR NU324

Heating tools

Safe and easy bearing removal in just 3 minutes

SKF Fixed Induction Heater EAZ series

The fixed size EAZ induction heaters are designed to safely and easily dismount, and mount, cylindrical roller bearing inner rings, which are often mounted with a very tight interference fit. The modular EAZ solution consists of one or two EAZ coils that are fitted for the application and connected to a matching control cabinet to power and operate the coil.

- **Perfect fit** - EAZ coils are specifically designed for a given inner ring to achieve optimum dismounting performance and safe operation.
- **Easy handling** - The lifting eye, two handles and a mechanism to lock the bearing inner ring inside the coil streamlines the dismounting process and helps the operator to safely handle the heater and hot ring.
- **Overheating protection** - The EAZ coils are equipped with an overheating protection circuit that stops the heating process when the internal coil temperature starts overheating.

Bearing				Fixed EAZ coil	
Designation	Inner ring dimension (mm)			Designation	Voltage and current information
	F	B	d		
315189 A	179	168	160	EAZ F179MV	MV: 400V, 105A / HV: 500V, 80A
314190	180	130	160	EAZ F180MV	MV: 400V, 85A / HV: 500V, 65A
313812	202	168	180	EAZ F202MV	MV: 400V, 85A / HV: 500V, 65A
313893	222	200	200	EAZ F222MV	MV: 400V, 125A / HV: 500V, 95A
313811	226	192	200	EAZ F226MV	MV: 400V, 120A / HV: 500V, 95A
313824	260	206	230	EAZ F260MV	MV: 400V, 160A / HV: 500V, 120A
313822	312	220	280	EAZ F312MV	MV: 400V, 160A / HV: 500V, 120A

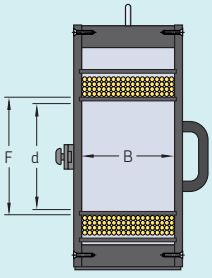

Cylindrical roller bearings are essential machine components for applications in steel, railway and other industries. In many cases cylindrical roller bearings experience harsh operating conditions and need to be replaced frequently. Fixed size EAZ heaters and corresponding control cabinets offer fast, easy and safe dismounting and mounting of cylindrical roller bearing inner rings and similar components. Heating the inner ring creates expansion that overcomes the interference fit and allows the ring to be moved without damaging the shaft or the ring.

Fixed EAZ coils are made upon request to perfectly match your SKF bearing or ring dimensions and voltage execution. Please specify your application and supply detailed information with your request to your SKF partner.

Intuitive usage

Control cabinets

The SKF EAZ control cabinets are designed to enable the easy operation of the EAZ coils. It allows the user to conveniently set the heating parameters and control the heating process.

- **Intuitive usage** - The control cabinets feature an intuitive touch screen that helps the operator to quickly set up the heater and control the heating progress.
- **Automatic temperature control** - The control cabinets can automatically stop the heating process when the desired temperature is reached by utilizing a temperature probe on the inner ring.
- **Demagnetization for mounting and dismounting** - The control cabinets feature automatic demagnetization at the end of the heating process. This reduces contamination risks and allows the EAZ system to be used for both mounting and dismounting applications.
- **SSD version for two coils** - For applications where different EAZ coils are required (e.g. one coil to remove a labyrinth seal ring and another coil to remove a double-row CRB), both EAZ coils can be permanently connected to the cabinet and the user can select which coil is operated.

Technical data – EAZ control cabinets

Designation	No. of outputs	Voltage (+/- 5%)	Frequency	Max. amperage limit
EAZ CC225B	1x EAZ coil	400V	50Hz	225A
EAZ CC350B	1x EAZ coil	400V	50Hz	350A
EAZ CC225A	1x EAZ coil	500V	50Hz	225A
EAZ CC350A	1x EAZ coil	500V	50Hz	350A
EAZ CCD225B	2x EAZ coil	400V	50Hz	225A
EAZ CCD350B	2x EAZ coil	400V	50Hz	350A
EAZ CCD225A	2x EAZ coil	500V	50Hz	225A
EAZ CCD350A	2x EAZ coil	500V	50Hz	350A

Two different menus for mounting and dismounting with an intuitive touch screen navigation

Easy operation with automatic temperature control that stops the heater when the selected temperature for mounting or dismounting is reached.

Heating tools

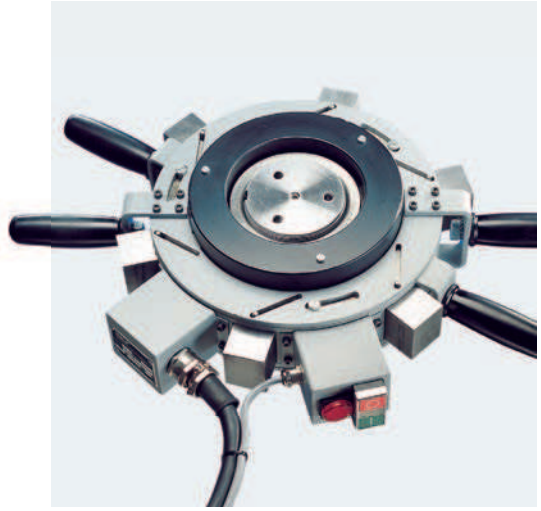

For frequent dismounting of cylindrical roller bearings

SKF Adjustable Induction Heaters EAZ series

The SKF EAZ 80/130 and EAZ 130/170 are used for frequent dismounting of cylindrical bearing inner rings. Where inner rings are removed infrequently, aluminium heating rings, SKF TMBR series, are also available. For larger cylindrical inner rings normally found in steel mill applications, SKF can supply special EAZ induction heaters.

- Covers most cylindrical bearings 65 to 130 mm *(2.5 to 5.1 in.)* bore diameter
- Wide range of power supplies
- Avoids shaft and bearing inner ring damage
- Fast and reliable bearing removal
- Up to n6 interference fit

Bearing selection chart (All E–types bearings included)

Designation	For bearings NJ-NUP					
EAZ 80/130	213–220	313–319	412–417	1014–1022	2213–2220	2313–2319
EAZ 130/170	222–228	321–324	419–422	1024–1030	2222–2228	2322–2324
	For bearings NU					
EAZ 80/130	213–221	313–320	412–418	1014–1022	2213–2220	2313–2320
EAZ 130/170	222–228	321–326	419–424	1024–1030	2222–2228	2322–2326

Ordering designations

Designation	Power supply	Current
EAZ 80/130A	2 × 230 V/50 Hz	40 A
EAZ 80/130B	2 × 400 V/50 Hz	45 A
EAZ 80/130C	2 × 460 V/60 Hz	25 A
EAZ 80/130D	2 × 415 V/50 Hz	35 A

Designation	Power supply	Current
EAZ 130/170A	2 × 230 V/50 Hz	60 A
EAZ 130/170B	2 × 400 V/50 Hz	45 A
EAZ 130/170D	3 × 230 V/50 Hz	43 A
EAZ 130/170E	3 × 400 V/50 Hz	35 A
EAZ 130/170H	3 × 415 V/50 Hz	30 A

Dimensions

Designation		EAZ 80/130	EAZ 130/170
Connection cable		5 m *(16 ft)*	5 m *(16 ft)*
Dimensions	a	134 mm *(5.3 in.)*	180 mm *(7.1 in.)*
	b	50 mm *(2.0 in.)*	50 mm *(2.0 in.)*
	c	80 ... 132 mm *(3.1... 5.2 in.)*	130 ... 172 mm *(5.1 ... 6.8 in.)*
Weight		28 kg *(62 lb)*	35 kg *(77 lb)*

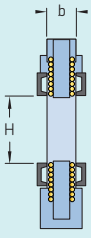

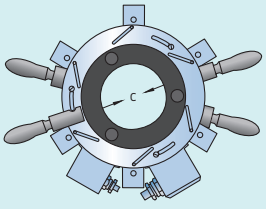

Accessories

Technical data

Designation	TMBA G11
Material	Hytex
Inner lining	Cotton
Size	9
Colour	White
Maximum temperature	150 °C *(302 °F)*
Pack size	1 pair

For safe handling of heated components up to 150 °C *(302 °F)*

SKF Heat Resistant Gloves TMBA G11

The SKF TMBA G11 are specially designed for the handling of heated bearings.

- Lint free
- Heat resistant up to 150 °C *(302 °F)*
- Cut resistant
- Tested and certified for mechanical risks (EN 388) and thermal risks (EN 407)

Technical data

Designation	TMBA G11ET
Material	Kevlar
Inner lining	Cotton
Size	10 (EN 420 size)
Colour	Yellow
Maximum temperature	500 °C *(932 °F)*
Pack size	1 pair

For safe handling of heated components up to 500 °C *(932 °F)*

SKF Extreme Temperature Gloves TMBA G11ET

The SKF TMBA G11ET are especially designed for the safe handling of heated bearings or other components for prolonged periods.

- Withstands extreme temperatures of up to 500 °C *(932 °F)* unless in the presence of hot liquid or steam
- Allows the safe handling of heated components
- High-degree of non-flammability reduces the risk of burning
- Extremely tough Kevlar gloves with high cut, abrasion, puncture and tear resistance for increased safety
- Lint free
- Tested and certified for mechanical risks (EN 388) and thermal risks (EN 407)

Technical data

Designation	TMBA G11H
Material	Polyaramid
Inner lining	Nitrile
Size	10
Colour	Black
Maximum temperature	250 °C *(482 °F)*
Pack size	1 pair

For safe handling of oily and heated components up to 250 °C *(482 °F)*

SKF Heat and Oil Resistant Gloves TMBA G11H

The SKF TMBA G11H are specially designed for the handling of hot and oily bearings.

- Offers a high degree of heat, cut, oil and water resistance
- Melt and burn resistant
- Maximum temperature: 250 °C *(482 °F)*
- Cut resistant
- Lint free
- Suitable for submerging in liquids with a temperature up to 120 °C *(248 °F)* (e.g. hot oil bath)
- Remains heat resistant when wet
- Tested and certified for mechanical risks (EN 388) and thermal risks (EN 407)